Shenzhen Leadtek Electronics Co.,Ltd

PRODUCT SPECIFICATION

TFT-LCD MODULE

Module No：LTK700WS12H

☑ Preliminary Specification

☐ Approval Specification

Designed by	Checked by	Approved by
Lan	Lidi	Steven

Final Approval by Customer

Approved by	Comment

※The specification of “TBD” should refer to the measured value of sample . If there is difference between the design specification and measured value, we naturally shall negotiate and agree to solution with customer.

Revision History

Version	Contents	Date	Note
V0	Original	2022.05.23	

Table Of Contents

List	Description	Page No.
	Cover	1
	Revision Record	2
	Table Of Contents	3
1	Numbering System	4
2	General Information	4
3	External Dimensions	5
4	Interface Description	6
5	Absolute Maximum Ratings	7
6	Electrical Characteristics	8
7	Timing Characteristics	8
8	Backlight Characteristics	9
9	Optical Characteristics	10
10	Reliability Test Conditions And Methods	11
11	Inspection Standard	12
12	Handling Precautions	15
13	Precaution For Use	16
14	Packing Method	16

1. Numbering System

TBD

2. General Information

LCM

ITEM	STANDARD VALUES	UNITS
LCD type	7.0”TFT	--
Dot arrangement	1024×3(RGB)×600	dots
Color Pixel Arrangement	RGB vertical stripe	--
Display Mode	IPS / Transmissive / Normally black	--
Viewing Direction	80/80/80/80	--
Interface	LVDS	--

Description

Module size	164.9(W)×100.0(H)×3.3(T)	mm
Active area	154.2144(W)×85.92(H)	
TFT Dot pitch	0.1506 (W)×0.1432 (H)	mm
Weight	TBD	g

3. External Dimensions

Front View

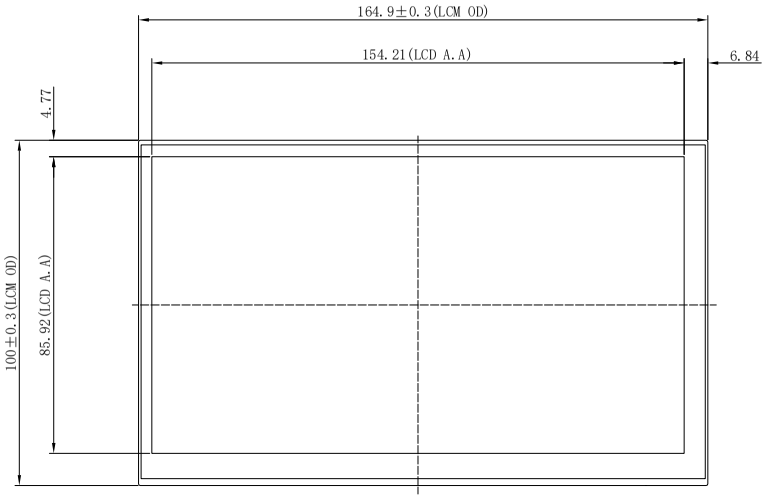

Side View

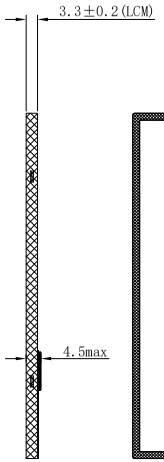

Back View

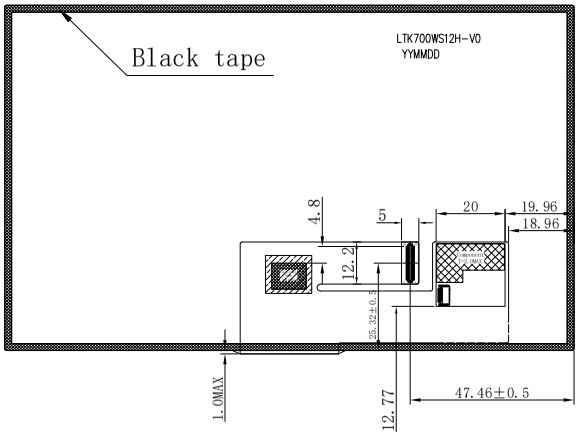

PIN	SYMBOL	PIN	SYMBOL
1	VDD5V	26	L/R
2	A	27	SELB
3	A	28	DIMO
4	K	29	RXIN3-
5	K	30	NC
6	GND	31	RXIN3+
7	NC	32	NC
8	CTP_VCC	33	RCLKIN-
9	TFT_VCC	34	NC
10	/RESET	35	RCLKIN+
11	NC	36	NC
12	NC	37	RXIN2-
13	GND	38	NC
14	NC	39	RXIN2+
15	GND	40	NC
16	NC	41	RXIN1-
17	NC	42	NC
18	NC	43	RXIN1+
19	NC	44	CTP_RST
20	NC	45	RXIN0-
21	NC	46	CTP_INT
22	STBYB	47	RXIN0+
23	NC	48	CTP_SCL
24	NC	49	CTP_SDA
25	U/D	50	GND

Customer:DF37NC-50DS-0.4V

LCM-CN:DF37C-50DP-0.4V

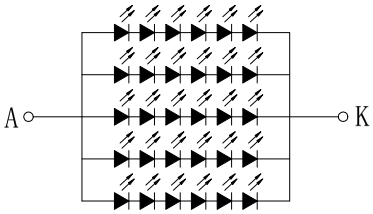

IF=100mA, VF=19.2V(TYP)

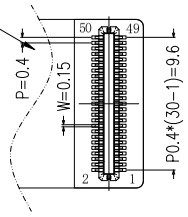

A SC 1:4

TFT NOTES:

1. DISPLAY TYPE: 7.0″ TFT ips 1024*RGB*600 TRANSMISSIVE/Normally Black
2. VIEWING DIRECTION: 80/80/80/80(U/D/L/R @ CR>10)
3. Luminance (LCM) : 380cd/m²(TYP), with APCF Uniformity≥80%
4. OPERATING TEMP: -20° C~+70° C
5. STORAGE TEMP: -30° C~+80° C
6. UNMARKER TOLERANCE: ±0.20 refenerce()
7. REQUIREMENTS ON ENVIRONMENTAL PROTECTION: RoHS

REV	DESCRIPTION	DATE	NAME
6			
4			
3			
2			
1			
0	NEW	2022.05.23	Ian

LEADTEK COMPANY LIMITED

SCALE:1/1	UNIT:mm	PAGE:1/1	Approve	Check	Drawn
Part No:	LTK700WS12H	VER:V0			Ian
Customer No:					

4. Interface Description

Pin NO.	SYMBOL	DESCRIPTION
1	VDD5V	5V for generating VGL,…
2	A	Power for LED backlight (Anode).
3	A	Power for LED backlight (Anode).
4	K	Power for LED backlight (Cathode).
5	K	Power for LED backlight (Cathode).
6	GND	Power ground.
7	NC	No connection
8	CTP_VCC	Power Voltage for CTP(2.5~3.3V).
9	TFT_VCC	Power Voltage for TFT(2.5~3.3V).
10	/RESET	Device reset signal.
11	NC	No connection
12	NC	No connection
13	GND	Power ground.
14	NC	No connection
15	GND	Power ground.
16	NC	No connection
17	NC	No connection
18	NC	No connection
19	NC	No connection
20	NC	No connection
21	NC	No connection
22	STBYB	Standby mode, Normally pulled high: STBYB=”1”: Normally operation STBYB=”0”: Display turn off, all output are High-Z
23	NC	No connection
24	NC	No connection
25	U/D	Vertical inversion. See note 2.
26	L/R	Horizontal inversion. See note 2.
27	SELB	6bit/8bit mode select. See note 1. 1:6bit，0:8bit
28	DIMO	Backlight CABC controller signal output
29	RXIN3-	-LVDS differential data input
30	NC	No connection
31	RXIN3+	+LVDS differential data input
32	NC	No connection
33	RXCLKIN-	-LVDS differential clock input
34	NC	No connection
35	RXCLKIN+	+LVDS differential clock input
36	NC	No connection
37	RXIN2-	-LVDS differential data input
38	NC	No connection
39	RXIN2+	+LVDS differential data input
40	NC	No connection
41	RXIN1-	-LVDS differential data input

42	NC	No connection
43	RXIN1+	+LVDS differential data input
44	CTP_RST	Reset pin. Active low to enter reset state.
45	RXIN0-	-LVDS differential data input
46	CTP_INT	Interruption signal.
47	RXIN0+	+LVDS differential data input
48	CTP_SCL	I2C_clock.
49	CTP_SDA	I2C_data.
50	GND	Power ground.

【Note1】 If LVDS input data is 6 bits ,SELB must be set to High;
If LVDS input data is 8 bits ,SELB must be set to Low.

【Note2】L/R：left or right setting
U/D：up or down setting

L/R	U/D	Data shifting
VCC	GND	Left→Right，Up→Down(default)
GND	GND	Right→Left，Up→Down
VCC	VCC	Left→Right，Down→Up
GND	VCC	Right→Left，Down→Up

Definition of scanning direction.

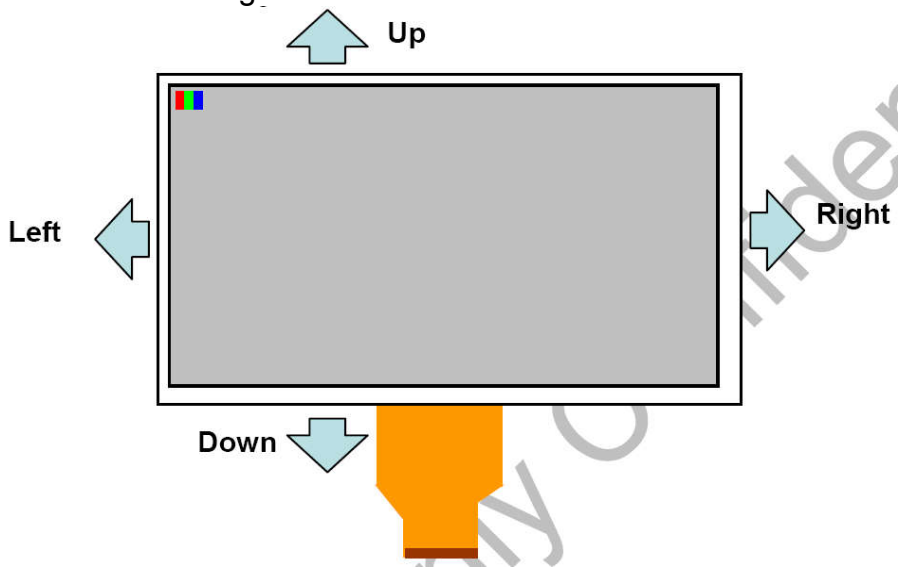

5. Absolute Maximum Ratings

Item	Symbol	Min.	Max.	Unit
Supply Voltage for TFT	TFT_VCC	-0.3	3.6	V
Supply Voltage for CTP	CTP_VCC	-0.3	3.6	
Input Voltage	Vin	-0.3	VCI+0.5	V
Operating Temperature	TOP	-20	70	°C
Storage Temperature	TST	-30	80	°C
Storage Humidity	HD	20	90	%RH

6. DC Characteristics

Item	Symbol	Min.	Typ.	Max.	Unit	Remark
Supply Voltage for TFT	TFT_VCC	2.5	2.8	3.3	V	-
Supply Voltage for CTP	CTP_VCC	2.5	2.8	3.3	V	-
Input High Voltage	V_{IH}	0.7VCC	-	VCC	V	Digital input pins
Input Low Voltage	V_{IL}	GND	-	0.3VCC	V	Digital input pins
Output High Voltage	V_{OH}	0.8VCC	-	VCC	V	Digital output pins
Output Low Voltage	V_{OL}	GND	-	0.2VCC	V	Digital output pins
I/O Leak Current	I_{LI}	-1.0	-	1.0	uA	-

7. Timing Characteristics

7.1 Data Input Format for LVDS

6-bit LVDS input(HSD=”H”)

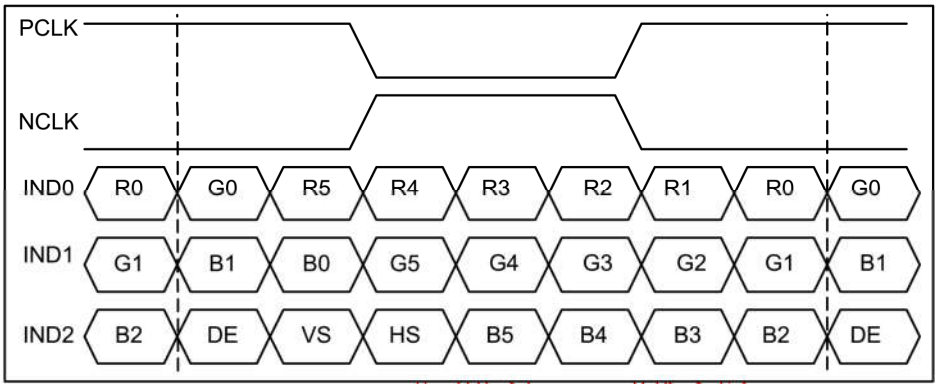

8-bit LVDS input(HSD=”H”)

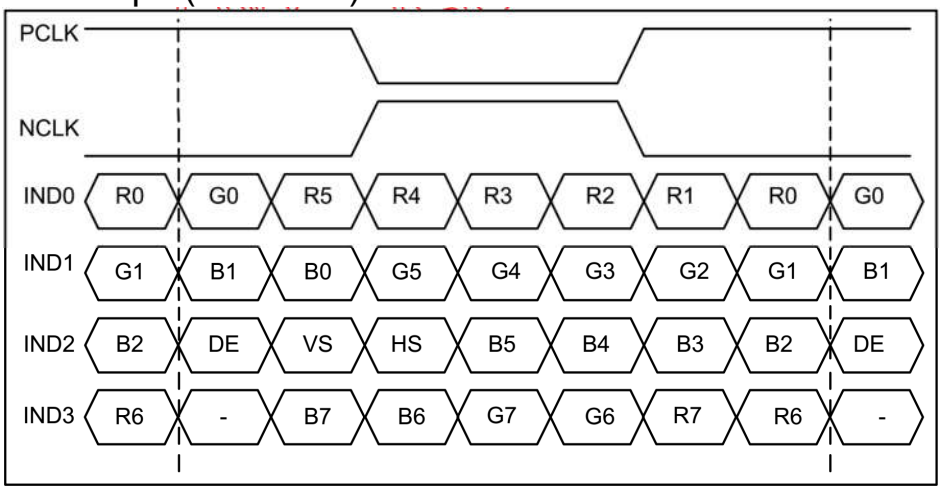

7.2 Timing

Parameter	Symbol	Min	Typ	Max	Unit	Remark
Clock frequency	fclk	40.8	51.2	67.2	MHz	Frame rate=60Hz
Horizontal display area	thd		1024		DCLK	
HS period time	th	1114	1344	1400	DCLK	
HS Blanking	thbp+thfp	90	320	376	DCLK	
Vertical display area	tvd		600		H	
VS period time	tv	610	635	800	H	
VS Blanking	tvbp+tvfp	10	35	200	H	

7.3 POWER ON/OFF SEQUENCE

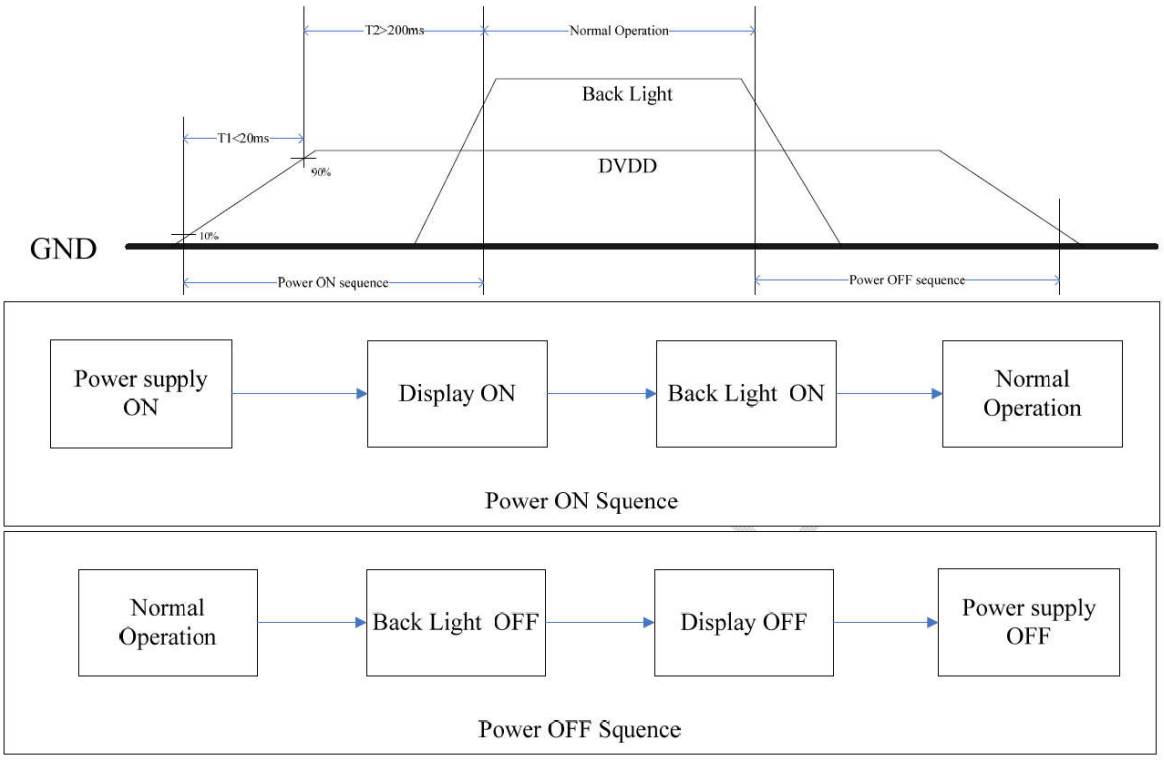

8. Backlight Charasterics

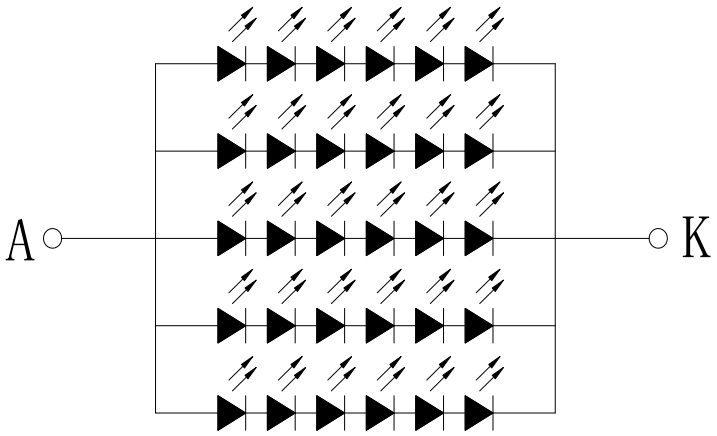

Item	Symbol	MIN	TYP	MAX	UNIT	Test Condition
Supply Voltage	Vf	18.0	19.2	20.4	V	If=100mA
Supply Current	If	-	100	-	mA	-
Luminous Intensity for LCM	-	320	380	-	Cd/m^2	If=100mA
Life Time	-	20000	-	-	Hr	If=100mA
Backlight Color	White					

9. Optical Characteristics

Parameter		Symbol	Condition	Min.	Typ.	Max.	Unit	Remark
Viewing Angle range	Horizontal	Θ_3	CR > 10	-	85	-	Deg.	WV-Pol Note 1
		Θ_9		-	85	-	Deg.	
	Vertical	Θ_{12}		-	85	-	Deg.	
		Θ_6		-	85	-	Deg.	
Luminance Contrast ratio		CR	Θ = 0°	-	800	-		Note 2
Cell Transmittance		Tr		4.8	5.0	-	%	Base on C Light Note 3
White Chromaticity		x_w		TYP. - 0.03	0.308	TYP. + 0.03		Note 4 Base on C Light
		y_w			0.336			
Reproduction of color (C light)	Red	R_x			0.599			
		R_y			0.338			
	Green	G_x			0.299			
		G_y			0.550			
	Blue	B_x			0.139			
		B_y			0.131			
Color Gamut (C light)				-	50	-	%	
Response Time (Rising + Falling)		T_{RT}	Ta= 25° C Θ = 0°	-	30	40	ms	Note 5

Note 1. Definition of view angle(θ，ψ)：

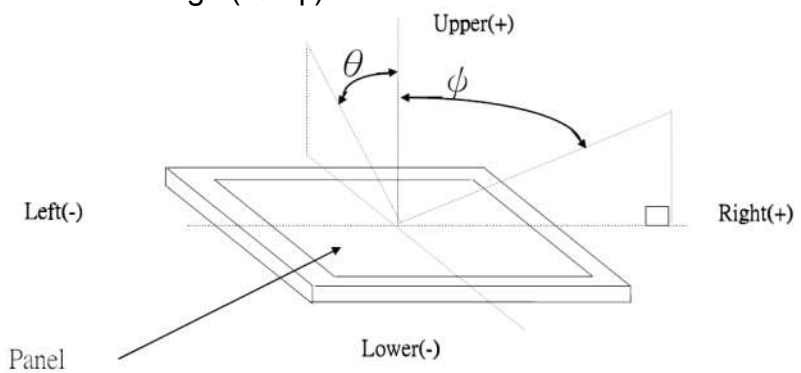

Note 2. Definition of Contrast Ratio：

CR = White Luminance (ON) / Black Luminance (OFF)

Note 3. Transmittance is the Value with Polarizer.

Note 4. The color chromaticity coordinates specified in Table 6 shall be calculated from the spectral data measured with all pixels first in red, green, blue and white. Measurements shall be made at the center of the panel.

Note 5. The electro-optical response time measurements shall be made as FIGURE 6 by switching the “data” input signal ON and OFF. The times needed for the luminance to change from 10% to 90% is Tr, and 90% to 10% is Td.

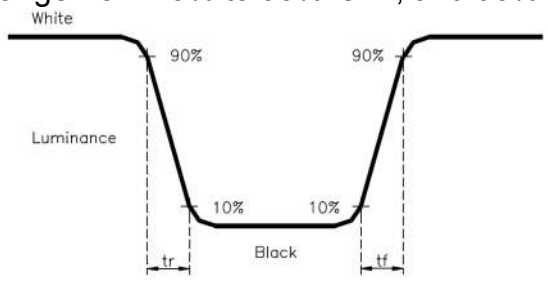

10. Reliability Test Conditions And Methods

NO.	TEST ITEMS	TEST CONDITION	INSPECTION AFTER TEST
①	High Temperature Storage	80℃±2℃×96Hours	Inspection after 2~4hours storage at room temperature,the samples should be free from defects: 1,Air bublle in the LCD. 2,Sealleak. 3,Non-display. 4,Missing segments. 5,Glass crack. 6,Current IDD is twice higher than initial value. 7,The surface shall be free from damage. 8,The electric charateristic requirements shall be satisfied.
②	Low Temperature Storage	-30℃±2℃×96Hours	
③	High Temperature Operating	70℃±2℃×96Hours	
④	Low Temperature Operating	-20℃±2℃×96Hours	
⑤	Temperature Cycle(Storage)	-20℃ (30min) ⟺ 25℃ (5min) ⟺ 70℃ (30min) 1cycle Total 10cycle	
⑥	Damp Proof Test (Storage)	50℃±5℃×90%RH×96Hours	
⑦	Vibration Test	Frequency:10Hz~55Hz~10Hz Amplitude:1.5M X,Y,Z direction for total 3hours (Packing Condition)	
⑧	Drooping Test	Drop to the ground from 1M height one time every side of carton. (Packing Condition)	
⑨	ESD Test	Voltage:±8KV,R:330Ω,C:150PF,Air Mode,10times	

REMARK:
1,The Test samples should be applied to only one test item.
2,Sample side for each test item is 5~10pcs.
3,For Damp Proof Test,Pure water(Resistance＞10MΩ)should be used.
4,In case of malfunction defect caused by ESD damage,if it would be recovered to normal state after resetting,it would be judge as a good part.
5,EL evaluation should be excepted from reliability test with humidity and temperature:Some defects such as black spot/blemish can happen by natural chemical reaction with humidity and Fluorescence EL has.
6,Failure Judgment Criterion:Basic Specification Electrical Characteristic,Mechanical Characteristic,Optical Characteristic.

11. Inspection Standard

This standard apply to C-STN/TFT module

1. **Spot check plan：**

   According to spot check level Ⅱ,MIL-STD-105D Level Ⅱ,the rank of accept or reject is below:

   A 级：major non-conformance： AQL 0.65 minor non-conformance： AQL 1.

2. **Inspection condition：**

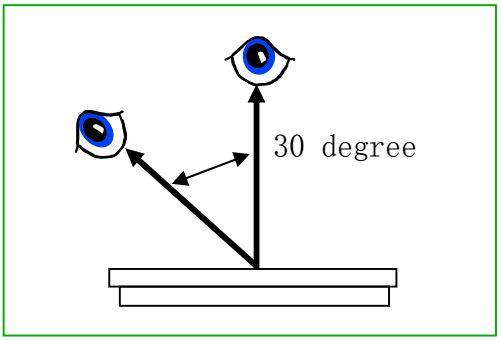

Under daylight lamp 20～40W，product distance inspector'eye 30cm,incline degree 30°。

3. **LCD area define：**

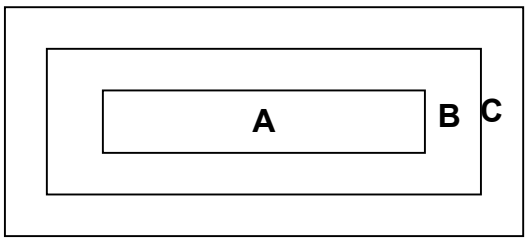

Area A：display area

Area B：VA area

Area C：out of VA area,not in sight after assemby

Remark :non-conformance at area C,but is OK that isn't influence raliability of product & assembly by customer.

4. Inspection standard

4.1 Major non-conformance

NO.	Item	Inspection standard	Rate
4.1.1	Function non-conformance	1) No display,display abnormaly 2) Miss line, short 3) B/L no function or function abnormaly 4) TP no function	major
4.1.2	miss	No matter miss what component	
4.1.3	Out of size	Module dimension out of spec	

4.2 Appearance non-conformance

NO.	Item	Inspection standard	Rate
4.2.1	Black or white spot（power on）	**dot non-conformance define Φ** $\Phi = \frac{(x+y)}{2}$ 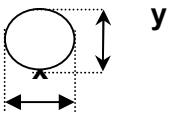 **A grade** **Most approve q'ty** (A / B / C) size（mm） \ area Φ≤0.10 — ignore 0.10＜Φ≤0.15 — 3 0.15＜Φ≤0.25 — 2 0.25＜Φ≤0.3 — 1 0.3＜Φ — ignore **Most approve 4 damages, dot to dot ⩾10mm**	Minor
4.2.2	Black or white line（power on）	**A grade** **Size(mm)** / **Most approve q'ty** (A / B / C) L(length) / W(width) ignore / W≤0.03 — ignore L≤5.0 / 0.03＜W≤0.05 — 2 L≤5.0 / 0.05＜W≤0.07 — 1 / 0.07＜W — Treat with dot non-conformance ignore **Most approve 3 damages, line to line ⩾10mm**	Minor
4.2.3	Polarizer position	1) polarizer attach meet drawing,disallow out of LCD. 2) polarizer must cover display area（special require unless）	Minor

<table>
<tr><td rowspan="3">4.2.4</td><td rowspan="3">LCD non-conformance</td><td>(i) crash at side（remark: S=ITO length）
 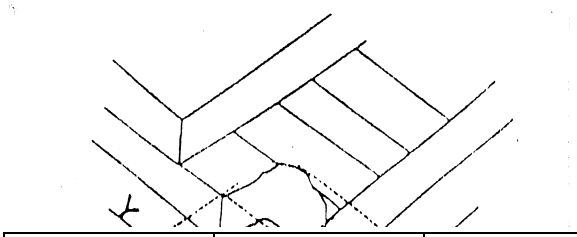

<table>
<tr><th>X</th><th>Y</th><th>Z</th></tr>
<tr><td>≤3.0</td><td>≤S</td><td>ignore</td></tr>
</table>
Crash disallow extend to ITO or seal.</td><td rowspan="3">Minor</td><td rowspan="3"></td></tr>
<tr><td>(ii) commonly surface scathe
 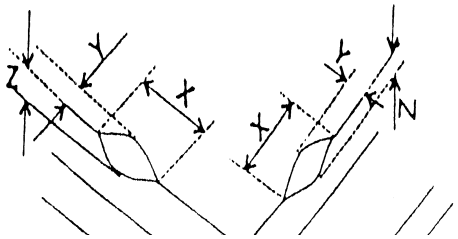

<table>
<tr><th>X</th><th>Y</th><th>Z</th></tr>
<tr><td>≤2.0</td><td><frame edge</td><td>ignore</td></tr>
</table></td></tr>
<tr><td>(iii) crack
Disallow extend crack
 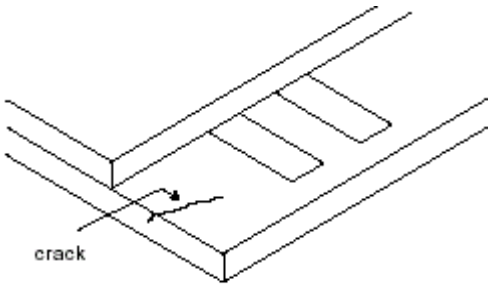
</td></tr>
<tr><td>4.2.5</td><td>Contrast voltage wa p</td><td>VOP/Vlcd voltage of confirmed sample±0.15V</td><td>Minor</td><td></td></tr>
<tr><td>4.2.6</td><td>color</td><td>Color & luminance of module scope reference spec</td><td>Minor</td><td></td></tr>
<tr><td>4.2.7</td><td>Cross talk</td><td>Reference confirmed limit sample</td><td>Minor</td><td></td></tr>
</table>

12. Handling Precautions

12.1 Mounting method

The LCD panel of LTK LCD module consists of two thin glass plates with polarizes which easily be damaged. And since the module in so constructed as to be fixed by utilizing fitting holes in the printed circuit board.

Extreme care should be needed when handling the LCD modules.

12.2 Caution of LCD handling and cleaning

When cleaning the display surface, Use soft cloth with solvent [recommended below] and wipe lightly

- Isopropyl alcohol
- Ethyl alcohol

Do not wipe the display surface with dry or hard materials that will damage the polarizer surface.

Do not use the following solvent:

- Water
- Aromatics

Do not wipe ITO pad area with the dry or hard materials that will damage the ITO patterns

Do not use the following solvent on the pad or prevent it from being contaminated:

- Soldering flux
- Chlorine (Cl) , Salfur (S)

If goods were sent without being sili8con coated on the pad, ITO patterns could be damaged due to the corrosion as time goes on.

If ITO corrosion happen by miss-handling or using some materials such as Chlorine (Cl), Salfur (S) from customer, Responsibility is on customer.

12.3 Caution against static charge

The LCD module use C-MOS LSI drivers, so we recommended that you:

Connect any unused input terminal to Vdd or Vss, do not input any signals before power is turned on, and ground your body, work/assembly areas, assembly equipment to protect against static electricity.

12.4 packing

- Module employ LCD elements and must be treated as such.
- Avoid intense shock and falls from a height.
- To prevent modules from degradation, do not operate or store them exposed direct to sunshine or high temperature/humidity

12.5 Caution for operation

- It is an indispensable condition to drive LCD's within the specified voltage limit since the higher voltage then the limit cause the shorter LCD life.
- An electrochemical reaction due to direct current causes LCD's undesirable deterioration, so that the use of direct current drive should be avoided.
- Response time will be extremely delayed at lower temperature then the operating temperature range and on the other hand at higher temperature LCD's how dark color in them. However those phenomena do not mean malfunction or out of order with LCD's, which will come back in the specified operation temperature.
- If the display area is pushed hard during operation, some font will be abnormally displayed but it resumes normal condition after turning off once.
- A slight dew depositing on terminals is a cause for electro-chemical reaction resulting in terminal open circuit.

Usage under the maximum operating temperature, 50%Rh or less is required.

12.6 storage

In the case of storing for a long period of time for instance, for years for the purpose or replacement use, the following ways are recommended.

- Storage in a polyethylene bag with the opening sealed so as not to enter fresh air outside in it . And with no desiccant.
- Placing in a dark place where neither exposure to direct sunlight nor light's keeping the storage temperature range.
- Storing with no touch on polarizer surface by the anything else.
  [It is recommended to store them as they have been contained in the inner container at the time of delivery from us

12.7 Safety

- It is recommendable to crash damaged or unnecessary LCD's into pieces and wash off liquid crystal by either of solvents such as acetone and ethanol, which should be burned up later.
- When any liquid leaked out of a damaged glass cell comes in contact with your hands, please wash it off well with soap and water

13. Precaution For Use

13.1

A limit sample should be provided by the both parties on an occasion when the both parties agreed its necessity. Judgment by a limit sample shall take effect after the limit sample has been established and confirmed by the both parties.

13.2

On the following occasions, the handing of problem should be decided through discussion and agreement between responsible of the both parties.

- When a question is arisen in this specification
- When a new problem is arisen which is not specified in this specifications
- When an inspection specifications change or operating condition change in customer is reported to LTK LCD , and some problem is arisen in this specification due to the change
- When a new problem is arisen at the customer's operating set for sample evaluation in the customer site.
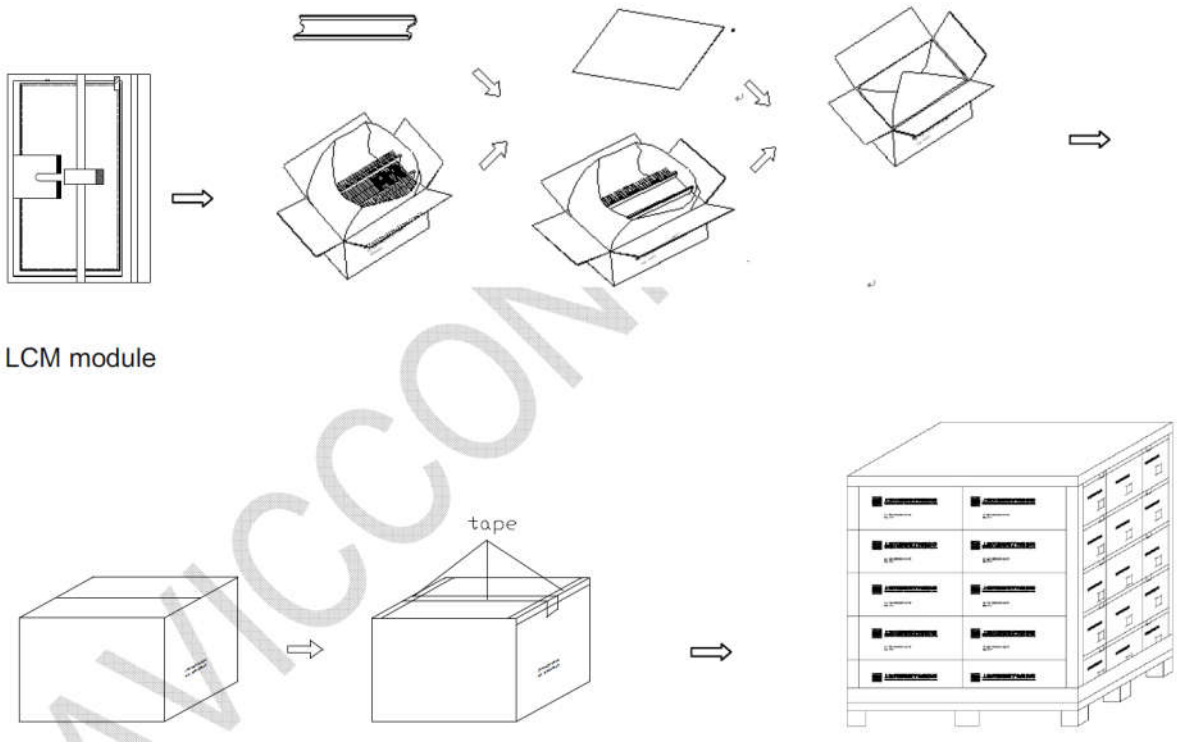
14. Packing Method